# Chapter 1
# About the LabelWriter Printer

Congratulations on purchasing a DYMO LabelWriter label printer. Your LabelWriter printer will give you years of reliable label printing. We encourage you to take a few minutes to review how to use and care for your printer.

This manual provides information about the following printer models:

- LabelWriter 450
- LabelWriter 450 Turbo
- LabelWriter 450 Twin Turbo
- LabelWriter 450 Duo
- LabelWriter 4XL
- LabelWriter SE450

For complete information about programming and using the LabelWriter SE450 printer, refer to the *LabelWriter SE450 Technical Reference Guide*, available from the Developers Program page on the DYMO Web site (www.dymo.com).

## LabelWriter Printer Features

Your LabelWriter printer is a direct thermal printer and does not use ink or toner. Instead, the printer uses heat from a thermal print head to print on specially treated, heat-sensitive labels. Labels are the only supplies you will ever need to buy.

Become familiar with the major components of the printer.

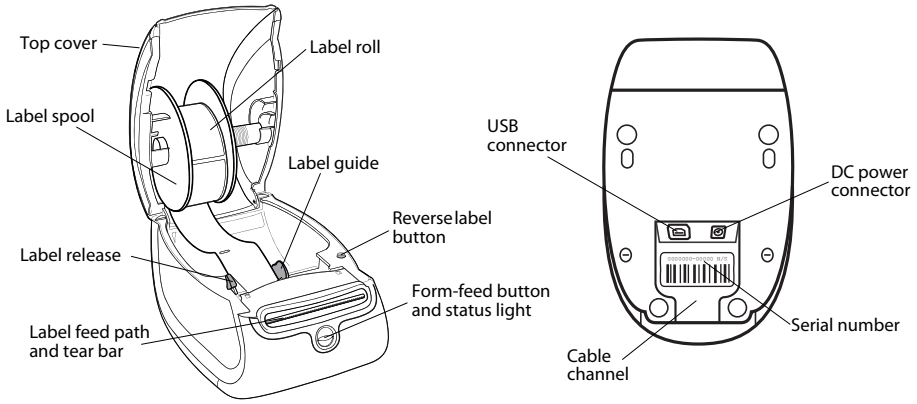


**LabelWriter 450**
**LabelWriter 450 Turbo**

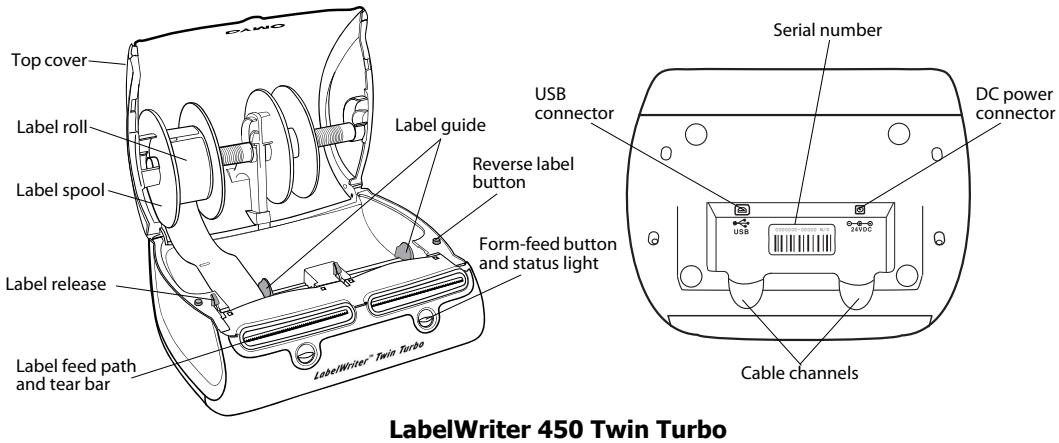


**LabelWriter 450 Twin Turbo**

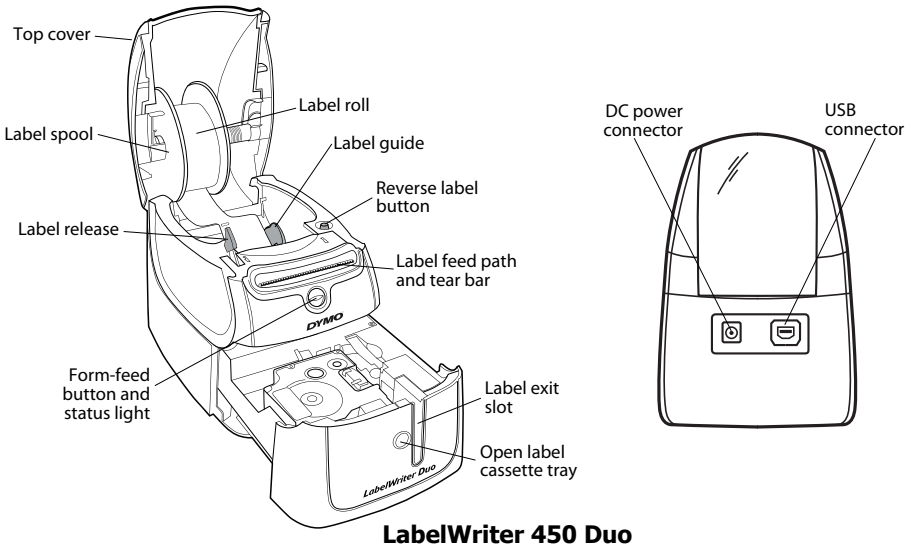


**LabelWriter 450 Duo**

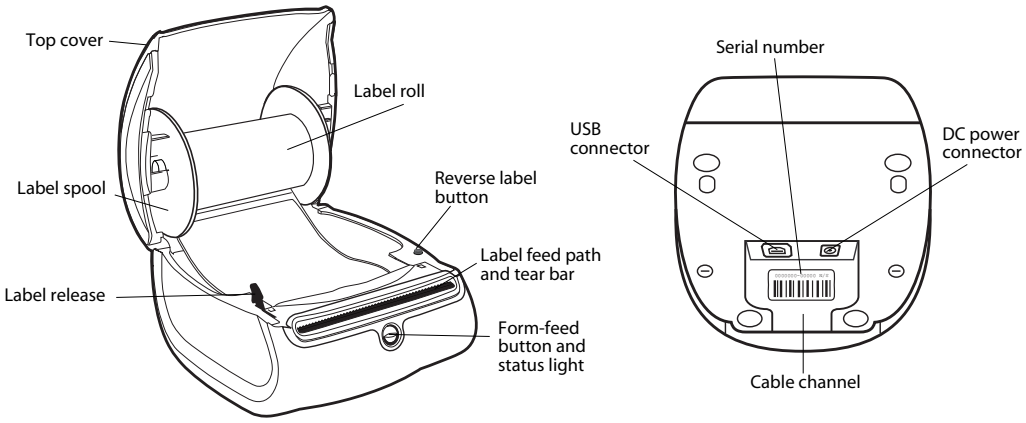


**LabelWriter 4XL**

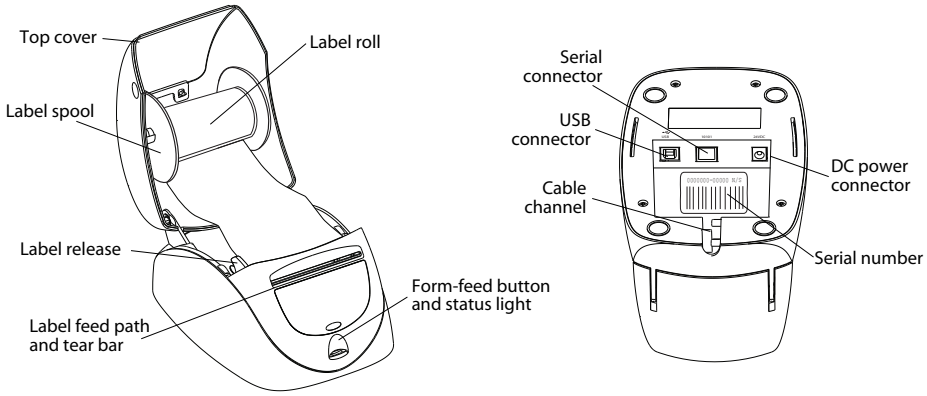


**LabelWriter SE450**

The form-feed button on the front of the printer advances a single label. The reverse label button is used to remove labels from the printer when changing rolls. The LabelWriter SE450 printer does not include a reverse label button.

The status light visually shows the current state of the printer. Refer to "Status Light" on page 19 for a complete description of the status light.

## System Requirements

The LabelWriter printer requires a USB 1.1 or USB 2.0 connection and one of the following:

- Windows® XP 32-bit
- Windows Vista®
- Windows® 7
- Mac OS® v10.4 or later

To use the LabelWriter SE450 printer with a serial connection, an RS-232 serial port is required.

## Printing Labels

Your LabelWriter printer was shipped with DYMO Label v.8 software to make designing and printing labels easy. You can also print labels directly from the desktop with QuickPrint, and from Microsoft Word, Excel, and Outlookwith DYMO Label Add-ins that are installed when you install DYMO Label v.8 software. See the DYMO Label v.8 online Help or Software User Guide for more information on using these features.

## Developer and SDK Information

DYMO provides various types of information designed to help developers create products that work with the LabelWriter printers and DYMO Label software. Below are some notes for those interested in developing products that work with LabelWriter printers.

- Keep in mind that LabelWriter printers use standard printer drivers. Therefore, printing to a LabelWriter printer is no different than printing to a laser or inkjet printer, except that the pages are smaller.

- In cases where you want to automate printing and take advantage of the label printing power built into DYMO Label software, a Software Developer's Kit (SDK) is included in your LabelWriter CD. The SDK provides COM and .NET interfaces. For more information, visit the Developer Program page on the DYMO web site. www.dymo.com.

You can check the Developer's forum on the DYMO Web site at www.dymo.com for the latest news. Also, you can join the Developer's mailing list to obtain developer-specific news and announcements.

For complete information about connecting the LabelWriter SE450 printer to the host computer or other device, and for information about programming and using the LabelWriter SE450 printer, refer to the *LabelWriter SE450 Technical Reference Guide*, available from the Developers Program page on the DYMO Web site (www.dymo.com).

# Chapter 2
# About Labels

DYMO LabelWriter printers use advanced *thermal* printing technology to print on specially treated, heat-sensitive labels. This means you will never have to replace toner, ink cartridges, or a ribbon to print labels.

**Note** DYMO's warranty does not cover malfunction or damage that may be caused by the use of labels other than DYMO-branded labels. Because DYMO LabelWriter printers use thermal printing technology, you must use specially designed and manufactured labels. The thermal coatings used on labels other than DYMO-branded labels may not be compatible, and may provide unsatisfactory printing or cause the printer to malfunction.

How long your labels will last depends on how the labels are used. Thermal paper labels, such as those printed by the LabelWriter printer, are susceptible to fading in two ways:

- Exposure to direct sunlight, to fluorescent light for an extended period of time, or to extreme heat will cause fading.
- Contact with plasticizers (for example, labels placed on plastic ring binders) will cause fading.

In the original packaging, the shelf life for LabelWriter labels is 18 months. When labels are used for short-term applications (envelopes, packages, and so on), fading is not a problem. When labels are used to label files in a file cabinet, fading is very gradual over many years. Labels applied to the edge of a notebook that is then placed on a shelf in the sun will show signs of fading within a few months.

To prolong label life when labels are not in use, store the labels in a cool, dry place and in the black bag in which they were originally packaged.

## Loading Labels

Each label roll comes in a black plastic bag. Make sure to store the label roll in this bag when the labels are not being used.

The LabelWriter Twin Turbo printer holds two label rolls, so you can print two types of labels without having to change the label roll.

The LabelWriter Duo printer prints two types of labels: die-cut paper labels (such as Address or Shipping labels) and D1 plastic labels.

**Important!**

In order for the labels to feed properly during printing, pay attention to the following when loading labels on the spool and into the printer:

- The label spool guide must be pushed flush against the label roll, with no gap. See Figure 2.
- The labels must be loaded with the left edge of the label inserted against the left edge of the label feed slot. See Figure 4.

Figures 3 and 4 in this section show loading labels in a LabelWriter 450 printer. However, the instructions apply to loading labels in any LabelWriter printer model.

**To load a label roll**

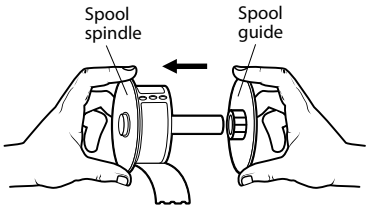

**Figure 1**

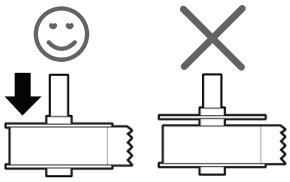
**Figure 2**

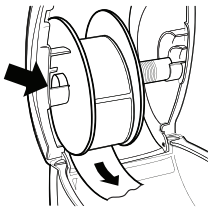
**Figure 3**

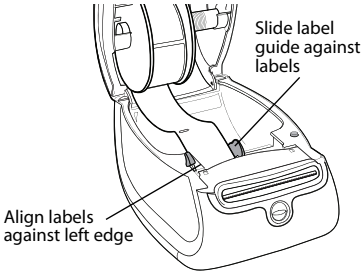

**Figure 4**

1. With the printer plugged in, press the form-feed button to eject the labels that protected the printer during shipment.
2. Open the top cover and remove any packing material inside the label compartment.
3. Remove the label spool from inside the cover and separate the spool guide from the spindle.
4. Hold the spool spindle in your left hand and place the label roll on the spindle so that the labels feed from underneath and the left edge of the label roll is firmly against the side of the spool. See Figure 1.
5. Slide the spool guide onto the right side of the spool and press the guide tightly against the side of the label roll, **leaving no gap** between the roll and the spool. See Figure 2.

   **Note** To ensure proper feeding of labels during printing, the label roll must fit snugly against both sides of the label spool, with no gaps.
6. Insert the label spool into the slot in the printer cover with the labels extending from underneath the roll. See Figure 3.
7. Align the left edge of the label with the left edge of the label feed slot and insert the label into the slot. See Figure 4.

   The printer automatically feeds the labels, stopping at the beginning of the first label.

   If the printer does not feed the labels, make sure the first label is fully inserted and then press the form-feed button.

   If the first label on the roll is not a full label, press the form-feed button to eject the partial label.

   **Note** Regardless of the label width, the left edge of the label must be aligned with the left edge of the label feed slot for the labels to feed properly.
8. **(450, 450 Turbo, Duo, and Twin Turbo Only)** Slide the label guide to the left until the label guide aligns with the right edge of the label. See Figure 4.

   Make sure that the label guide does not pinch the label.
9. **(Twin Turbo Only)** Repeat steps 3-8 to load a second roll of labels.
10. Carefully lower the top cover.

**To load a label cassette (LabelWriter Duo)**

1. Press the button on the front of the printer to open the label cassette tray.

   **Note** The first time you use the printer, remove the protective cardboard insert from the label exit slot. See Figure 5.

2. Make sure the label and ribbon are taut across the mouth of the cassette and that the label passes between the label guides.

   If necessary, turn the ribbon rewind spool clockwise to tighten the ribbon.

3. Insert the cassette and press firmly until the cassette clicks into place. Make sure label and ribbon are positioned correctly. See Figure 6.

4. Press the button on the front of the printer to close the label cassette tray.

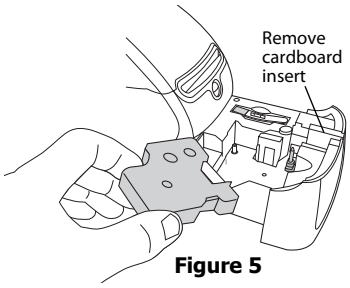


**Figure 5**

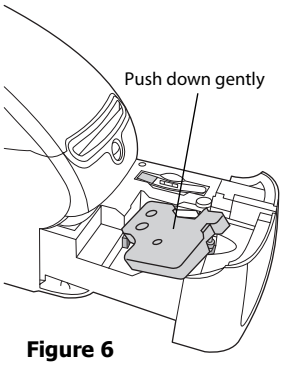


**Figure 6**

# Ordering Labels

DYMO offers a full range of labels for the LabelWriter printers, including labels suited for addressing envelopes, shipping packages, naming file folders, labeling all sorts of media, printing name badges, and much more. A complete listing can be found at the DYMO Web site: www.dymo.com.

**Caution** DYMO's warranty does not cover malfunction or damage that may be caused by the use of labels other than DYMO-branded labels. Because DYMO LabelWriter printers use thermal printing technology, you must use specially designed and manufactured labels. The thermal coatings used on labels other than DYMO-branded labels may not be compatible and may provide unsatisfactory printing or cause the printer to malfunction.

# Chapter 5
# Getting Help

Your LabelWriter printer should offer years of trouble-free printing with very little maintenance. However, in the event that you encounter a problem, this chapter offers suggestions for resolving problems that can occur when using the printer. If you are unable to solve a problem, this chapter also describes how to contact DYMO Technical Support.

For complete information about programming and using the LabelWriter SE450 printer, refer to the *LabelWriter SE450 Technical Reference Guide*, available from the Developers Program page on the DYMO Web site (www.dymo.com).

## Troubleshooting

This section provides information on how to detect and correct problems you might encounter while using your LabelWriter printer.

### Status Light

The status light visually shows the current state of the printer:

| Status Light | Description |
|---|---|
| Solid Blue | Power is on and printer is ready. |
| Dimmed Blue | Printer is in power saving mode. |
| Flashing Blue | Labels are not loaded properly or the label roll is empty. |

For the LabelWriter SE450, the status light shows the current state of the printer as follows:

| SE450 Status Light | Description |
|---|---|
| Solid Blue | USB cable is connected. Power is on and printer is ready. |
| Dimmed Blue | USB cable is connected and printer is in power saving mode. |
| Flashing Red | Labels are not loaded properly or the label roll is empty. |
| Solid Green | Serial cable is connected. Power is on and printer is ready. Printer will also show solid green when both USB and Serial cables are connected or when no cables are connected. |
| Dimmed Green | Serial cable is connected and pirnter is in power saving mode. |
| Flashing Green | Serial cable is connected and printer is in configuration mode. For complete information about programming and using the LabelWriter SE450 printer, refer to the *LabelWriter SE450 Technical Reference Guide*, available from the Developers Program page on the DYMO Web site. www.dymo.com |

## Performing a Printer Self-Test

If you experience problems with broken characters or other print quality issues, perform a printer self-test. The self-test verifies that all elements of the print head and printing mechanism are in working condition.

**To perform a self-test**

1. With a roll of labels in the printer, press and hold the form-feed button on the front of the printer for five to ten seconds.

   The printer begins printing vertical lines along the width of the printer. The test pattern automatically changes every 3/4 inch (19 mm).
2. Once the self-test begins, release the form-feed button.
3. To stop the self-test, press and release the form-feed button.

## Clearing Label Jams

**To clear labels that have become jammed in the printer**

1. Tear off any labels that have already fed through the printer.
2. Press the label release lever forward and pull the jammed label out of the label feed slot.

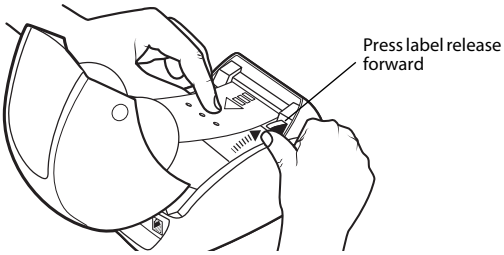


## Correcting Poor Print Quality

Poor print quality is most frequently caused by one of the following:

- An old roll of labels
- Labels made by a manufacturer other than DYMO
- Labels where the thermal coating has been compromised
- A dirty print head

First, make sure you are using DYMO-branded labels. Do not use third-party labels because the thermal coating on other labels has a different sensitivity than DYMO-branded labels. Also, the perforated holes between the labels made by other manufacturers are frequently not detectable by LabelWriter printers.

If the print quality becomes faint, small dots of white appear scattered through the printed characters, or light and dark patches of printing appear, you are probably using a faulty roll of labels. Try using a different roll from a fresh box. If the second roll prints correctly, the problem is with the first roll of labels.

Another possibility is that the LabelWriter print head needs cleaning. Every LabelWriter printer comes with a cleaning card. See "Caring for Your Printer" on page 17 for information about the LabelWriter cleaning card.

## Labels Do Not Feed Correctly

If your labels do not feed correctly, check the following:

- Make sure your labels are loaded properly and that the left edge of the label is aligned with the left edge of the label feed slot. See "Loading Labels" on page 5.
- Make sure you are using DYMO-branded labels. The perforated holes between the labels made by other manufacturers are frequently not detectable by DYMO printers. When the perforations are not detected, the labels will not feed correctly. Using third-party labels may also void your warranty.

## Printer Does Not Print or Stops Printing

If your printer does not print or stops printing while in use, follow the steps below to track down the problem.

1. Make sure the printer is still getting power and that the power cable has not been disconnected.

   If the status light on the front of the printer is not lit, check to make sure the power cable is plugged in, and that your power strip is working.

   To make sure the problem is not with the outlet or power strip, try plugging something else into the wall outlet and power strip.
2. Confirm that the printer is feeding labels properly by pushing the form feed button while the printer is on.

   If the labels are jammed, the status light will blink. Refer to "Clearing Label Jams" on page 20.
3. Make sure that your USB cable has not come loose from the back of your printer or from your computer.

   Refer to the installation instructions in the *Quick Start Guide* to make sure the cable is connected properly.
4. (Windows) Check that your LabelWriter printer driver is installed correctly.

   The LabelWriter printer driver takes print data from your software and directs it to the LabelWriter printer. The driver is automatically installed when you install the software that comes with your printer. However, the driver may have been changed or deleted by mistake.

   a. From the **Start** menu, choose **Printers and Faxes**.
   b. Right-click the LabelWriter printer icon, and then choose **Properties**.
   c. From the **Properties** dialog box, click **Printing Preferences**.
   d. From the **Preferences** dialog box, click **Advanced**.

      The Advanced dialog box appears.

   If no errors are displayed the Advanced dialog box, the printer driver is installed correctly.

If you are still having problems after checking the above items, contact Customer Service to arrange for a Return Authorization (RA). See "Obtaining Technical Support" on page 22.